Water Regulator

Pressure adjustment of water line



Body material: Special brass

Model/Specifications

Model	WR110-□-X224	WR110-□-X215
Port size	Rc1/8, 1/4	Rc1/8, 1/4, NPT1/8, 1/4
Fluid *1	Water	
Ambient and fluid temperature	–5 to 60°C (No freezing)	
Proof pressure	1.72 MPa	
Maximum operating pressure	0.8 MPa	
Set pressure range	0.08 to 0.39 MPa	0.05 to 0.69 MPa
Pressure gauge port size	Rc1/8, 1/4	Rc1/8, 1/4, NPT1/8, 1/4
Weight [kg]	0.26	

∗1: Cannot be used with deionized water.
∗: When using a bracket, order the B21-1P separately.
∗: The pressure gauge is optional (sold separately). Refer to the table on the right.

How to Order

Set pressure range: 0.08 to 0.39 MPa

WR110 – 02 – X224

Port size

01	Rc1/8
02	Rc1/4

Set pressure range: 0.05 to 0.69 MPa

WR110 – □ 02 – X215

Thread type

Nil	Rc
N	NPT

Port size

01	1/8
02	1/4

Pressure Gauge/Option (Sold separately)



For details, refer to the **WEB catalog**.

Model	Pressure range *1 MPa	Indication unit	Connection thread	Note
G46-4-01 to 02-SRB	0 to 0.4	MPa	R1/8 R1/4	—
G46-7-02-SRB	0 to 0.7		R1/4	
G46-10-02-SRB	0 to 1.0			

∗1: Do not apply more pressure than the max. pressure displayed. It may cause a malfunction.

Related Equipment

Water Strainer Series WF300



14-E628

Body material: Bronze
Mesh: 100/70/50/25 mesh



Check Valve INA-14-290/XTO-674-□□

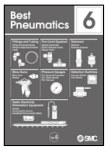

Best Pneumatics

Body material: Brass

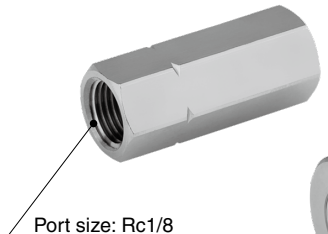

Port size: Rc1/8



Port size: Rc1/4, 3/8, 1/2

WR110-□-X224/WR110-□-X215

SMC

WR110-□-X224/WR110-□-X215

Flow Rate Characteristics Conditions/Fluid: Water, Port size: Rc1/4

WR110-02-X224

Inlet pressure: 0.6 MPa

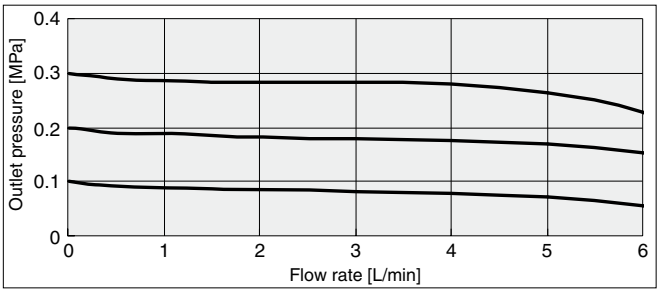

WR110-02-X215

Inlet pressure: 0.8 MPa

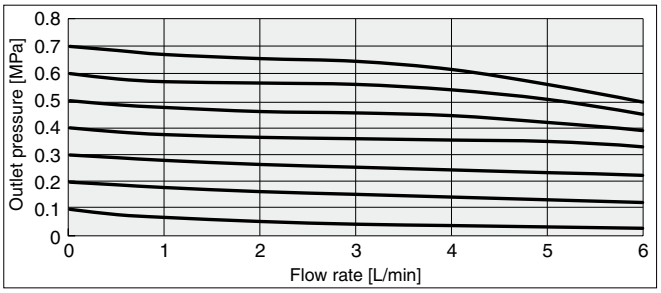

Dimensions

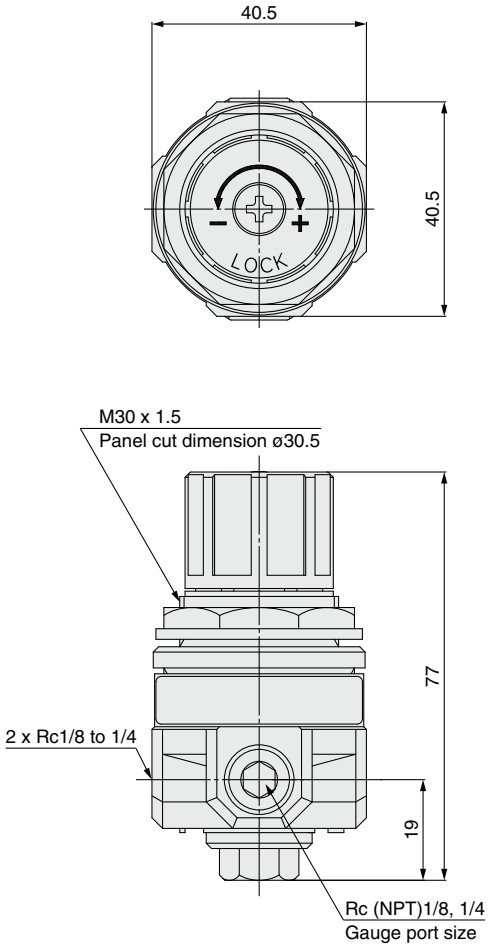

Construction

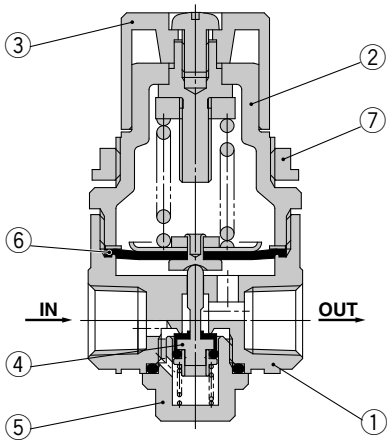

Component Parts

No.	Description	Material
1	**Body**	Special brass
2	**Bonnet**	Nylon
3	**Knob**	ABS
5	**Valve guide**	Special brass
6	**Diaphragm assembly**	Weather resistant NBR/Stainless steel
7	**Set nut**	ZDC (Black zinc chromated)

Replacement Parts

No.	Description	Material	Part number
4	**Valve**	Stainless steel/NBR	1349173-5

⚠ Safety Instructions Be sure to read the “Handling Precautions for SMC Products” (M-E03-3) and “Operation Manual” before use.