



aerospace
climate control
electromechanical
filtration
fluid & gas handling
hydraulics
pneumatics
process control
sealing & shielding





High Flow NAMUR Valve G1/4" & G1/2"

for Control of Pneumatic Actuators

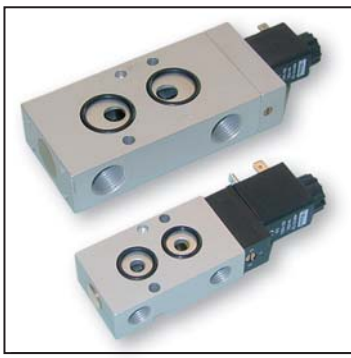

Parker

ENGINEERING YOUR SUCCESS.

Market Description







Process industries
Chemical, Petrochemical industries
Oil & Gas
Water & Sewage
Pulp & Paper
Food & Beverage
Pharmaceutical industry
Powder Dosing-Transportation
Air Dryers

Description of Applications

Control of single or double acting pneumatic actuators, in safe or dangerous areas.

NAMUR Interfaces 1/4" & 1/2"

The interface design is conform to the NAMUR standard and to the VDI/VDE 3845 recommendations of the actuator industry. It allows a compact design of the actuator/valve unit. In case of a 3/2 function, the air of the actuator spring chamber also flows through the pilot valve (re-breather function). This prevents corrosion of the actuator springs.

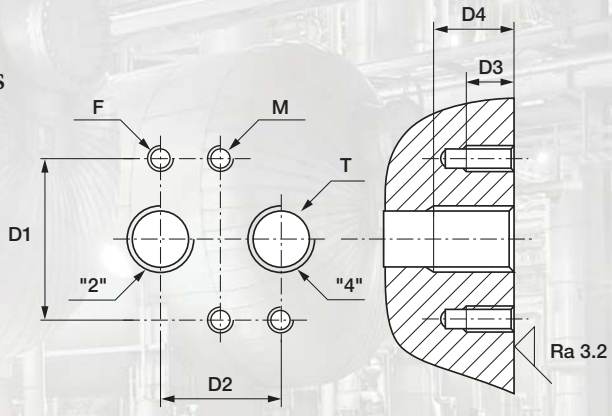

F	T	D1 mm	D2 mm	D3 mm	D4 min. Mm	M mm
M5	1/4	32	24	8	12	M5
M6	1/2	45	40	10	16	M6

F: 2 mounting holes - **T:** 2 actuators control port - **M:** 2 holes for dowel pins

Customer Value Proposition

- High flow: 1.250 l/min (1/4"), 3.000 l/min (1/2")
- Compact design
- Long life expectancy
- N3x series compatible with any Parker Lucifer coil (ATEX or not) of electrical group 2 (8/9 W coils)
- Fail safe standard
- Reduced inventory (3/2 & 5/2 functions with the same valve on 341Nx5 series)
- Mechanical part of the valve ATEX certified according standard EN 13463-1 & -5



General Information

Function:	3/2 , 5/2, 3/2 <=> 5/2 and 5/3 valves.
Manual override:	Standard on all versions.
Design:	Solenoid operated spool valve with combined spring and air return & external air pressure operated versions.
Mounting:	For direct mounting on NAMUR interface ¼" & ½".
Mounting position:	Indifferent.
Material specifications:	Aluminium body. Internal parts from stainless steel. Sealing material from NBR.
Range of admissible pressure drop:	Δp min. = see table. Δp max. = 10 bar.
Media:	Dry or lubricated air.
Fluid temperature:	Min. 0°C Max. + 50°C
Ambient temperature:	-10°C to +50°C
Electrical part:	N0x series are compatible with 22mm coil 496131 / 496482 / 496637 Series N3x series are compatible with 32/37/40 mm coils part of electrical group 2 (8/9W), including 481865 / 495870 / 495905 Series.
Solenoid duty:	100% ED.
Voltage:	481865 coil: 12 VDC , 24 VDC , 48 VDC , 110VDC, 24 V / 50 AC, 48 V / 50 AC, 110 V / 50 AC, 220-230V/50 AC, 115 V / 60 Hz AC, 230 V / 60 AC.
Voltage tolerance:	± 10% of nominal for 481865 coil.
Class of insulation material:	Class F for 481865 coil.
Standards:	Mechanical ATEX conform to EN 13463-1 & -5.

G1/4" Series

Solenoid Operated Versions
N03-N05 Series with 22 mm Coil

Port size	Orifice	Q_N	Admissible differential pressure (bar) max.			Max. admissible fluid temperature (°C) Min. = 0°C	Seat disc	Reference number			Consumption Power (Watt)		Weight (g)	Dimensions Reference
G	mm	L/min	min	DC=	AC~	Air & Neutral gases		Valve	Housing	Coil	DC	AC		

3/2 Solenoid operated - Combined spring & air return (monostable)

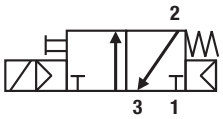

1/4	7	1250	2.5	10	10	50	NBR	**331N03**	-	496131	3	3	300	1
1/4	7	1250	2.5	10	10	50	NBR	**331N03**	-	496482	3	3	300	1
1/4	7	1250	2.5	10	10	50	NBR	**331N03**	-	496637	3	3	300	1

5/2 Solenoid operated - Combined spring & air return (monostable)

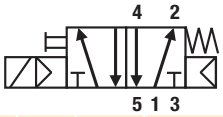

1/4	7	1250	2.5	10	10	50	NBR	**341N03**	-	496131	3	3	300	2
1/4	7	1250	2.5	10	10	50	NBR	**341N03**	-	496482	3	3	300	2
1/4	7	1250	2.5	10	10	50	NBR	**341N03**	-	496637	3	3	300	2

3/2 <=> 5/2 with conversion plate - Solenoid operated Combined spring & air return (monostable)

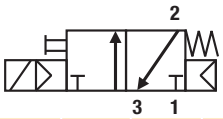

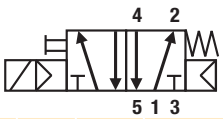

1/4	7	1250	2.5	10	10	50	NBR	**341N05**	-	496131	3	3	310	3
1/4	7	1250	2.5	10	10	50	NBR	**341N05**	-	496482	3	3	310	3
1/4	7	1250	2.5	10	10	50	NBR	**341N05**	-	496637	3	3	310	3

5/2 Solenoid operated and return (bistable)

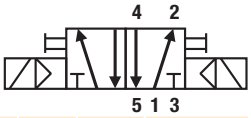

1/4	7	1250	2.5	10	10	50	NBR	**347N03**	-	496131	3	3	430	4
1/4	7	1250	2.5	10	10	50	NBR	**347N03**	-	496482	3	3	430	4
1/4	7	1250	2.5	10	10	50	NBR	**347N03**	-	496637	3	3	430	4

5/3 W1 closed in center position - Solenoid operated and return

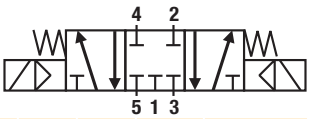

1/4	7	1250	2.5	10	10	50	NBR	**342N03**	-	496131	3	3	430	4
1/4	7	1250	2.5	10	10	50	NBR	**342N03**	-	496482	3	3	430	4
1/4	7	1250	2.5	10	10	50	NBR	**342N03**	-	496637	3	3	430	4

5/3 W3 exhausted in center position Solenoid operated and return (bistable)

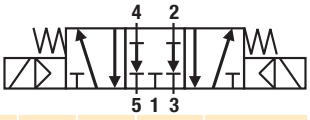

1/4	7	1250	2.5	10	10	50	NBR	**343N03**	-	496131	3	3	430	4
1/4	7	1250	2.5	10	10	50	NBR	**343N03**	-	496482	3	3	430	4
1/4	7	1250	2.5	10	10	50	NBR	**343N03**	-	496637	3	3	430	4

Please consult the "How to Order" part at the end of each coil chapter.

Dimensions Reference 1

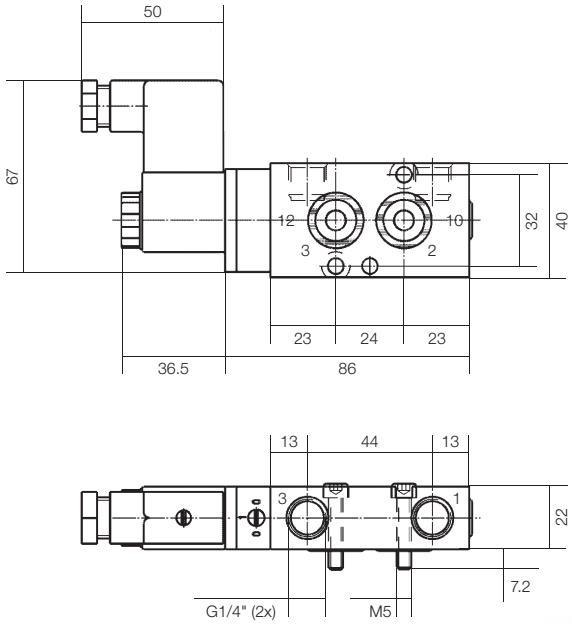

Dimensions Reference 2

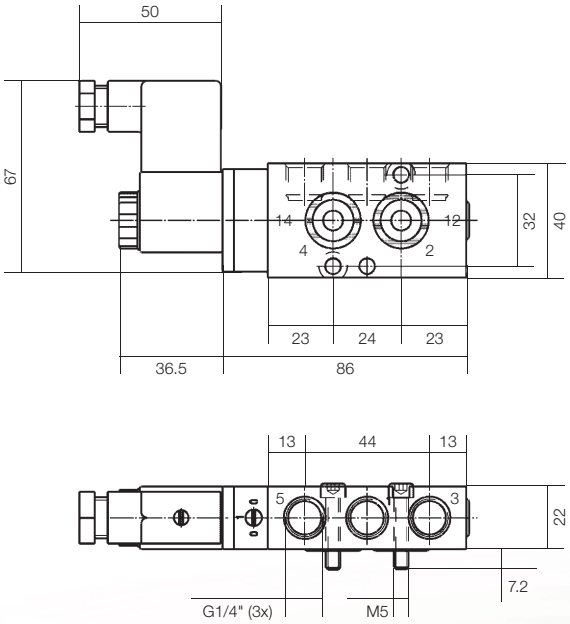

Dimensions Reference 3

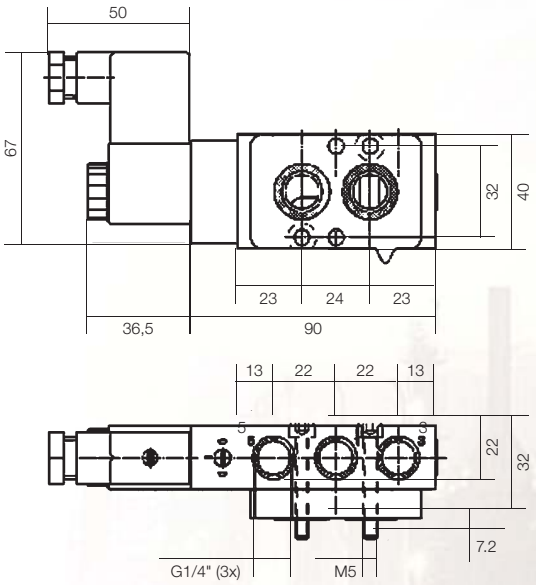

Dimensions Reference 4

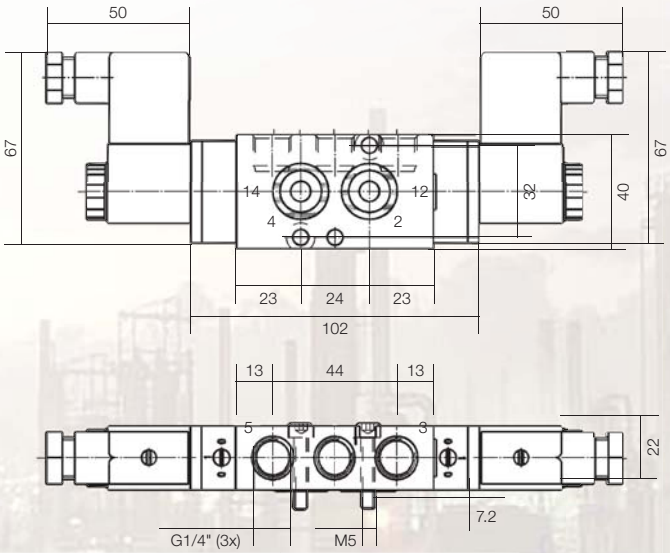

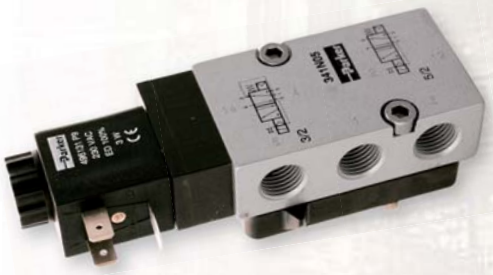



G1/4" Series

Solenoid Operated Versions
N33-N35 Series with 32 / 37 / 40 mm Coil

Port size	Orifice	Q_N	Admissible differential pressure (bar) max.			Max. admissible fluid temperature (°C) Min. = 0°C	Seat disc	Reference number			Consumption Power (Watt)		Weight (g)	Elect. Group	Dim. Ref.
G	mm	L/min	min	DC=	AC~	Air & Neutral gases		Valve	Housing	Coil	DC	AC			

3/2 <=> 5/2 with conversion plate - Solenoid operated
Combined spring & air return (monostable)

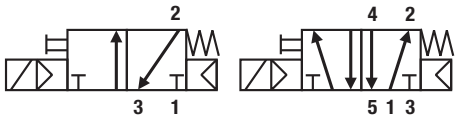

1/4	7	1250	2.5	10	10	50	NBR	**341N35**	**2995**	481865	9	8	480	2	5
1/4	7	1250	2.5	10	10	50	NBR	-	**2995**	495870	9	8	700	-	2
1/4	7	1250	2.5	10	10	50	NBR	-	-	495905	8	8	740	-	2

5/2 Solenoid operated and return (bistable)

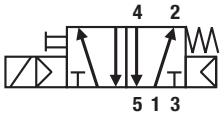

1/4	7	1250	2.5	10	10	50	NBR	**347N33**	**2995**	481865	9	8	750	2	6
1/4	7	1250	2.5	10	10	50	NBR	-	**2995**	495870	9	8	1190	2	-
1/4	7	1250	2.5	10	10	50	NBR	-	-	495905	8	8	1270	2	-

5/3 W1 closed in center position
Solenoid operated and return (bistable)

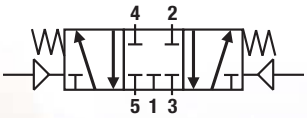

1/4	7	1250	2.5	10	10	50	NBR	**342N33**	**2995**	481865	9	8	750	2	6
1/4	7	1250	2.5	10	10	50	NBR	-	**2995**	495870	9	8	1190	2	-
1/4	7	1250	2.5	10	10	50	NBR	-	-	495905	8	8	1270	2	-

Dimensions Reference 5

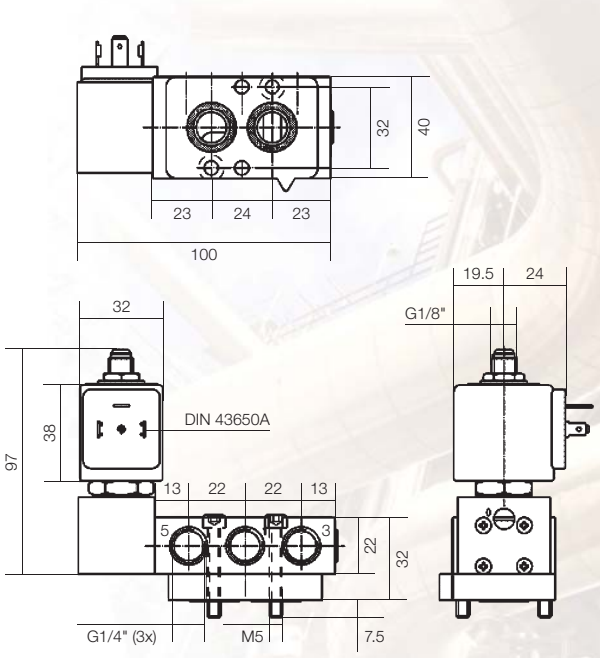

Dimensions Reference 6

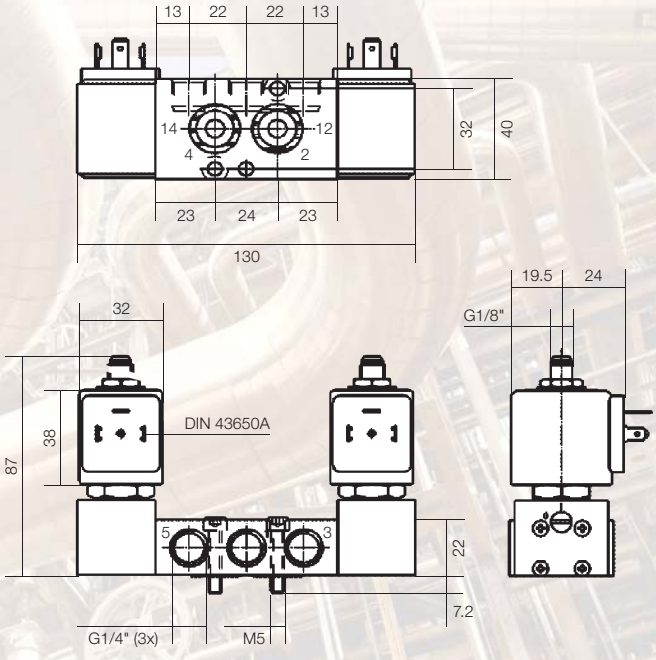

Please consult the "How to Order" part at the end of each coil chapter.

G1/4" Series

External Pressure Air Operated Series
5xx N03 Series

Port size	Orifice	Q_N	Admissible differential pressure (bar) max.			Max. admissible fluid temperature (°C) Min. = 0°C	Seat disc	Reference number			Consumption Power (Watt)		Weight (g)	Dimensions Reference
G	mm	L/min	min	DC=	AC~	Air & Neutral gases		Valve	Housing	Coil	DC	AC		

3/2 External pressure air operated
Combined spring & air return (monostable)
External pressure supply 2.5 to 10 bar

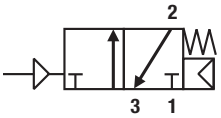

1/4	7	1250	2.5	10	10	50	NBR	**531N03**	-	w/o	-	-	210	7

5/2 external pressure air operated
Combined spring & air return (monostable)
External pressure supply 2.5 to 10 bar

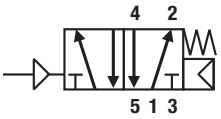

1/4	7	1250	2.5	10	10	50	NBR	**541N03**	-	w/o	-	-	210	8

5/2 external pressure air operated
External pressure air return (bistable)
External pressure supply 2.5 to 10 bar

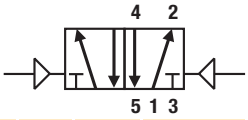

1/4	7	1250	2.5	10	10	50	NBR	**547N03**	-	w/o	-	-	240	9

5/3 W1 closed in center position - External pressure air operated
External pressure air return (bistable)
External pressure supply 2.5 to 10 bar

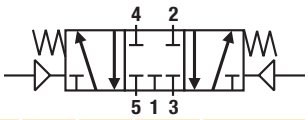

1/4	7	1250	2.5	10	10	50	NBR	**542N03**	-	w/o	-	-	240	9

Dimensions Reference 7

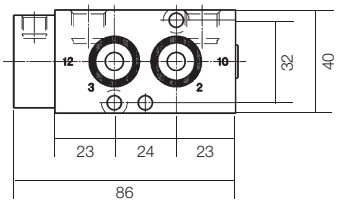

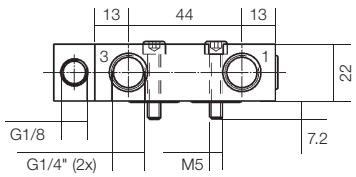

Dimensions Reference 8

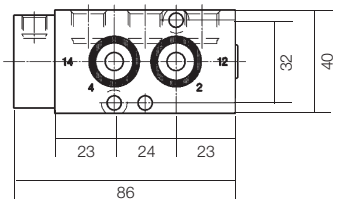

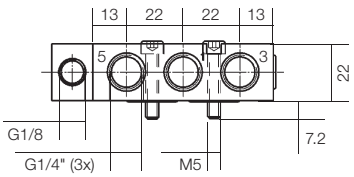

Dimensions Reference 9

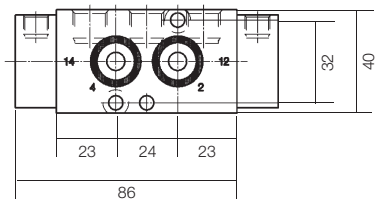

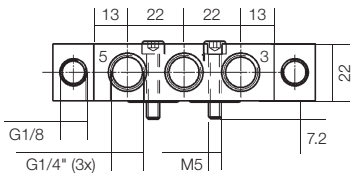

G1/2" Series

Solenoid Operated Versions
N34 Series with 32 / 37 / 40 mm Coil

Port size	Orifice	Q_N	Admissible differential pressure (bar) max.			Max. admissible fluid temperature (°C) Min. = 0°C	Seat disc	Reference number			Consumption Power (Watt)		Weight (g)	Elect. Group	Dim. Ref.
G	mm	L/min	min	DC=	AC~	Air & Neutral gases		Valve	Housing	Coil	DC	AC			

3/2 Solenoid operated
Combined spring & air return (monostable)

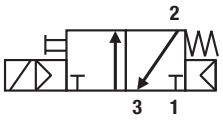

1/2	12	3000	2.5	10	10	50	NBR	**331N34**	**2995**	481865	9	8	910	2	10
1/2	12	3000	2.5	10	10	50	NBR	-	**2995**	495870	9	8	1130	2	-
1/2	12	3000	2.5	10	10	50	NBR	-	-	495905	8	8	1170	2	-

5/2 Solenoid operated
Combined spring & air return (monostable)

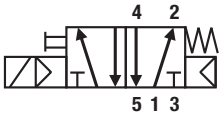

1/2	12	3000	2.5	10	10	50	NBR	**341N34**	**2995**	481865	9	8	900	2	11
1/2	12	3000	2.5	10	10	50	NBR	-	**2995**	495870	9	8	1120	2	-
1/2	12	3000	2.5	10	10	50	NBR	-	-	495905	8	8	1160	2	-

5/2 Solenoid operated and return (bistable)

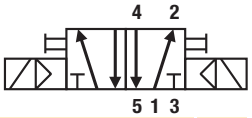

1/2	12	3000	2.5	10	10	50	NBR	**347N34**	**2995**	481865	9	8	1240	2	12
1/2	12	3000	2.5	10	10	50	NBR	-	**2995**	495870	9	8	1680	2	-
1/2	12	3000	2.5	10	10	50	NBR	-	-	495905	8	8	1760	2	-

Dimensions Reference 10

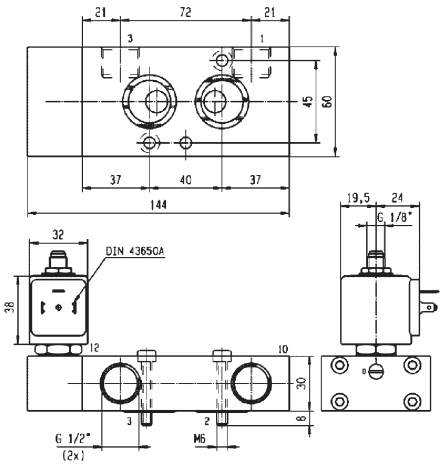

Dimensions Reference 11

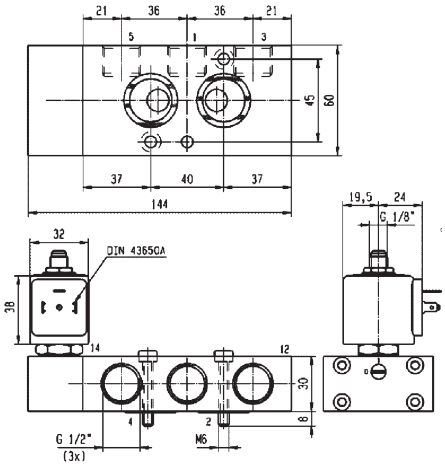

Dimensions Reference 12

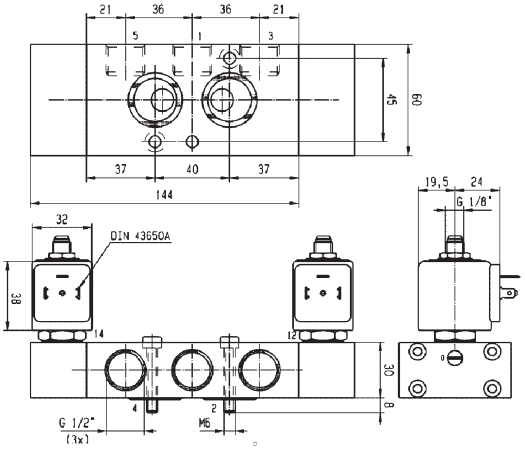

Please consult the "How to Order" part at the end of each coil chapter.

G1/2" Series

External Pressure Air Operated Series
5 xx N04 Series

Port size	Orifice	Q_N	Admissible differential pressure (bar) max.			Max. admissible fluid temperature (°C) Min. = 0°C	Seat disc	Reference number			Consumption Power (Watt)		Weight (g)	Dimensions Reference
G	mm	L/min	min	DC=	AC~	Air & Neutral gases		Valve	Housing	Coil	DC	AC		

3/2 External pressure air operated
Combined spring & air return (monostable)
External pressure supply 2.5 to 10 bar

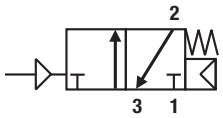

1/2	12	3000	2.5	10	10	50	NBR	**531N04**	-	w/o	-	-	620	13

5/2 external pressure air operated
Combined spring & air return (monostable)
External pressure supply 2.5 to 10 bar

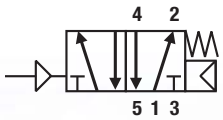

1/2	12	3000	2.5	10	10	50	NBR	**541N04**	-	w/o	-	-	600	14

Dimensions Reference 13

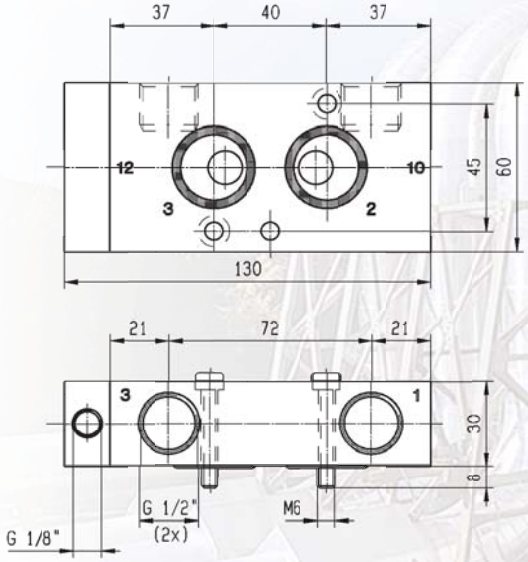

Dimensions Reference 14

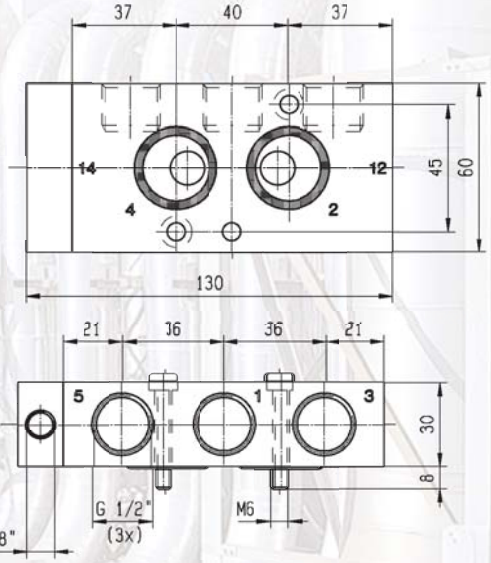



Coils and Spare Parts Informations

Coils 22 mm for N03-N05 Series Safe Area & ATEX Zone 22

Ref. 496131 / 496482 / 496637

These coils with connection for 2 P+G DIN 43650 B plug are encapsulated in synthetic material, conform to the IEC/CENELEC safety standards and comply with European low voltage directive 73/23/EC .

- Power: 3W
- Insulation Class: F (155°C)
- Degree of Protection: IP65 (with plug)
- Duty Cycle: 100% ED
- Ambient Temperature: -10°C to 50°C

3 different types are available:

- **Ref. 496131**
  for a safe area without plug
- **Ref. 496482**
  for a safe area with plug
- **Ref. 496637**
  for an ATEX area Zone 22 

496637 coil series with connection 2P + G when mounted together with the supplied Pg9 plug (delivered with the coil) are suitable for use in dangerous areas (dust Zone 22) according to the European directive ATEX 94/9/C. Protection mode: Ex tD A22 IP65 - T95°C

Available Voltages	Safe area without DIN plug Order Code	Safe area with DIN plug Order Code	ATEX Zone 22 EX II 3D Order Code
12VDC	**496131 C1**	**496482 C1**	**496637 C1**
24VDC	**496131 C2**	**496482 C2**	**496637 C2**
48VDC	**496131 C4**	**496482 C4**	**496637 C4**
110VDC	**496131 C5**	**496482 C5**	**496637 C5**
24/50-60VAC	**496131 P0**	**496482 P0**	**496637 P0**
48/50-60VAC	**496131 S4**	**496482 S4**	**496637 S4**
110/50-60VAC	**496131 P2**	**496482 P2**	**496637 P2**
115/60VAC	**496131 K8**	**496482 K8**	**496637 K8**
230/50-60VAC	**496131 P9**	**496482 P9**	**496637 P9**

How to Order

The housing kit is already included into the coil reference, so it's not needed to add it in the order code:

Valve Reference Number - Coil Reference - Voltage code = Order code

Example: 341N03 - 496131 C2

Valves and coils may be ordered also separately.

Coils 32 mm / 37 mm / 40 mm for N33-N34-N35 Series Safe Area

Ref. 481865

N3x series are compatible with any Parker Lucifer coil part of electrical group 2. That group includes many different coils for safe areas or areas submitted to ATEX certifications. These coils are of the 8/9W class.

These coils with connection for 2P+G DIN 43650 A plug are encapsulated in synthetic material, conform to the IEC/CENELEC safety standards and comply with European low voltage directive 73/23/EC.

- Power: 8W (AC) 9W (DC)
- Insulation Class: F (155°C)
- Degree of Protection: IP65 (with plug)
- Duty Cycle: 100% ED
- Voltage Tolerance -10%/+10%
- Ambient Temperature -40°C/+50°C
  - The application can be limited also by the temperature range of the valve

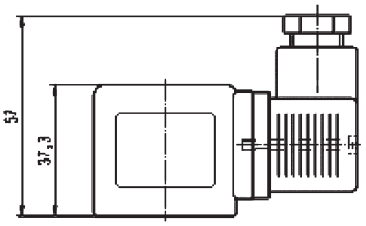

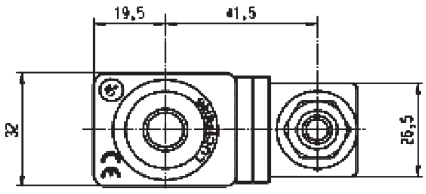

Available Voltages	Order Code
12VDC	**481865 C1**
24VDC	**481865 C2**
48VDC	**481865 C4**
110VDC	**481865 C5**
24/50VAC	**481865 A2**
48/50VAC	**481865 A4**
110/50VAC	**481865 A5**
220-230/50VAC	**481865 3D**
380/50VAC	**481865 A9**
24/60VAC	**481865 B2**
115/60VAC	**481865 K8**
230/60VAC	**481865 J3**



How to Order

This coil must be used together with a housing kit which includes a nut, a plate, and a washer. Housing Kit Order Code: **2995**

Valve Reference Number - Housing Reference - Coil Reference - Voltage Code = Order Code

Example: 341N35 - 2995 - 481865 C2

Valves and coils may be ordered also separately.

Coils and Spare Parts Informations

Coils 32 mm / 37 mm / 40 mm for N33-N34-N35 Series Safe Area Coil 481000 Series with 4538 Watertight and dust proof housing IP67

Ref. 481000

Coil 481000 series is encapsulated in synthetic material. Electrical connection is made with screw terminals for wire up to 1.5 mm. This coil conforms to the IEC/CENELEC safety standards and complies with European low voltage directive 73/23/EC. It must be used with a metallic housing.

- Power: 8W
- Insulation Class: F (155°C)
- Degree of Protection: IP67 (with 4538 housing)
- Duty Cycle: 100%
- Voltage Tolerance -10%/+10%
- Ambient Temperature -40°C/+50°C
  - The application can be limited also by the temperature range of the valve

Available Voltages	Order Code
12VDC	**481000 C1**
24VDC	**481000 C2**
48VDC	**481000 C4**
110VDC	**481000 C5**
24/50VAC	**481000 A2**
48/50VAC	**481000 A4**
110-115/50VAC	**481000 OA**
220-230/50VAC	**481000 3D**
380/50-440/60VAC	**481000 5P**
24/60VAC	**481000 B2**
110-115/60VAC	**481000 6J**
220-240/60VAC	**481000 4K**
42/50-48/60VAC	**481000 S7**

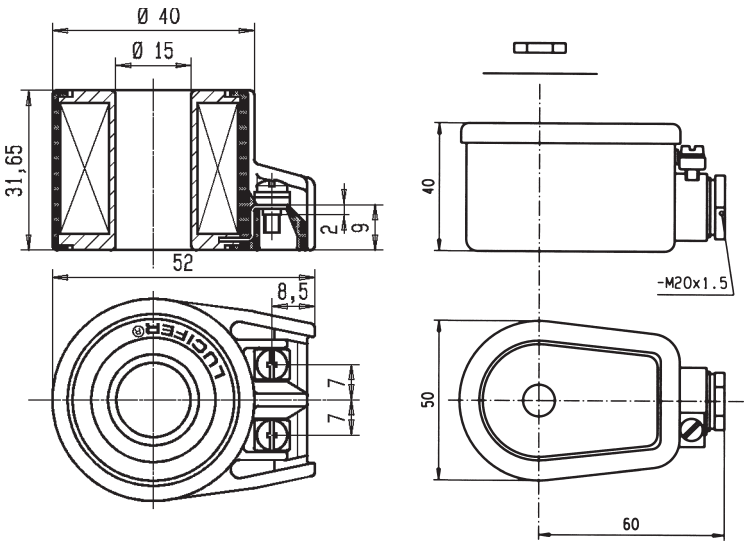

Housing 4538

This enclosure is dust and water proof. It corresponds to the protection degree IP67 according to IEC/EN60529. Corrosion resistant, the metallic housing offers good protection for the coil against shocks. It can be 360° orientable. This housing must be equipped with 481000 series coil.

Material: galvanized passivated steel - Degree of protection IP67 according to IEC/EN 60529 - Electrical connection: cable connection by cable gland according to DIN46320. Cable with outer diameter 6.5-13.5 mm (M20x1.5) can be simply sealed using a rubber gland resilient sealing rings. The enclosure is internally and externally fitted with grounding and earthing screw terminals.

How to Order

Valve Reference Number - Housing Reference - Coil Reference - Voltage Code = Order Code

Example: 331N34 - 4538 - 481000C2

Valves and coils may be ordered also separately.

Coils 32 mm / 37 mm / 40 mm for N33-N34-N35 Series ATEX Zone 2-22

Ref. 495870

This coil with connection 2P+G - when mounted together with the supplied Pg 9 plug (delivered with the coil), is suitable for use in Gas and Dust dangerous areas **(Zone 2-22)**, according to the European directive **ATEX 94/9/C**.

Certificate LCIE 05 ATEX 6003 X - Protection mode: non sparking / limited energy solenoid

- II 3 G - Ex nAC IIC T3 / T4
- II 3 D - Ex tD A22 IP65 - T 195°C / T 130°C

CE 0081 Ex II 3 G-D

- Power: 8W (AC) 9W (DC)
- Insulation Class: F (155°C)
- Degree of Protection: IP65 (with plug)
- Duty Cycle: 100% ED
- Voltage Tolerance -10%/+10%
- Ambient temperature
  - T3 (gaz) T 195°C (dust) -40°C/+65°C
  - T4 (gaz) T 130°C (dust) -40°C/+50°C
  - The application can be limited also by the temperature range of the valve

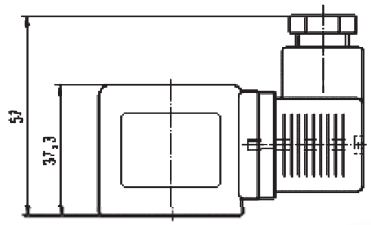

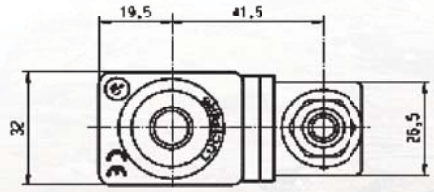

Available Voltages	Order Code
24VDC	**495870 C2**
48VDC	**495870 C4**
110VDC	**495870 C5**
24/50VAC	**495870 A2**
48/50VAC	**495870 A4**
110/50VAC	**495870 A5**
220-230/50VAC	**495870 3D**



How to Order

This coil must be used together with a housing kit which includes a nut, a plate, and a washer. Housing kit order code: **2995**

Valve Reference Number - Coil Reference - Voltage code = Order code

Example: 331N34 - 2995 - 495870 A5

Valves and coils may be ordered also separately.

Coils 32 mm / 37 mm / 40 mm for N33-N34-N35 Series ATEX Zone 1-21

Ref. 495905

This coil is suitable for use in Gas and Dust dangerous areas **(Zone 1-21)**, according to the European directive **ATEX 94/9/C**. It's also IECEx certified according to the IECEx Scheme. **Certificate LCIE 02 ATEX 6451 X - Protection modes: Explosionproof solenoids with flameproof enclosure / encapsulation "d mb"**

- II 2 G - Ex d mb IIC T4
- II 2 D - Ex tD A21 IP67 - T 130°C

CE 0081 Ex II 2 G/D IECEx

- Insulation Class H (180°C)
- Power: 8W (AC-DC)
- Degree of Protection IP67
- Duty Cycle 100%
- Voltage Tolerance -10%/+10%
- Ambient Temperature: -40°C/+65°C
  - The application can be limited also by the temperature range of the valve

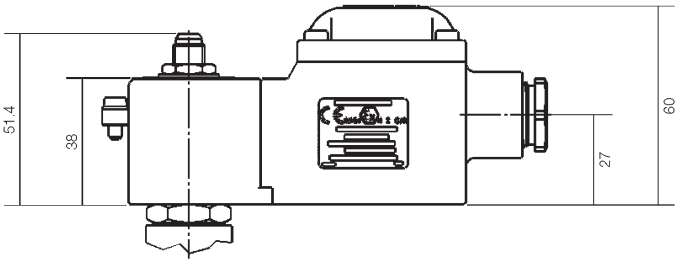

Available Voltages	Order Code
24VDC	**495905 C2**
48VDC	**495905 C4**
110VDC	**495905 C5**
24/50VAC	**495905 A2**
48/50VAC	**495905 A4**
110/50VAC	**495905 E5**
220-230/50VAC	**495905 3D**
115/60	**495905 E5**
240/60	**495905 B8**

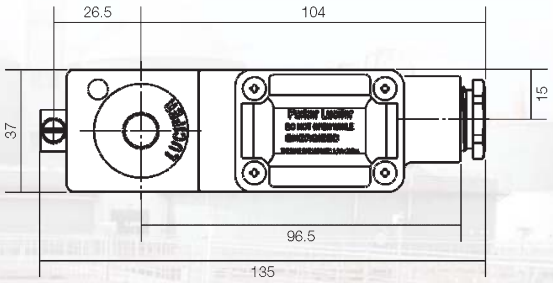

Electric connection is done in the connection box on an easily accessible connector terminals.
M20x1.5 Cable gland



How to Order

The housing kit is already included into the coil reference, so it's not needed to add it in the order code:

Valve Reference Number - Coil Reference - Voltage code = Order code

Example: 347N33 - 495905 C2

Valves and coils may be ordered also separately.

Coils 32 mm / 37 mm / 40 mm for N33-N34-N35 Series ATEX Solutions Zone 1-21

Ref. 483371 & 494040

These coils are suitable for use in Gas and Dust dangerous areas **(Zone 1-21)**, according to the European directive **ATEX 94/9/C. Protection mode:encapsulated electrical parts with increased safety.**

Reference		483371 or HZ06	494040 or HZ23	
Approval		**LCIE 02 ATEX 6011 X**	**LCIE 02 ATEX 6013 X**	
Type of protection	Gas	II 2 G - Ex e mb II T4	II 2 G - Ex e mb II T3	II 2 G - Ex e mb II T4
	Dust	II 2 D - Ex tD A21 T 130°C	II 2 D - Ex tD A21 T 195°C	II 2 D - Ex tD A21 T 130°C
Degree of protection		IP67	IP67	
Ambiant temperature		-40°C to +65°C	-40°C to +90°C	-40°C to +65°C
		The application is limited also by the temperature range of the valve		
Class of insulation		F (155°)	H (180°)	
Electrical connection		By special cable gland or M20x1.5 "Ex e" on screw terminals for wires up to 1.5 mm². Cables with outside diameter 6.5 mm to 13.5 mm can be simply sealed using the rubber gland with resilient sealing rings supplied.		
Elect. Power	**DC** Pn (hot)	8 W	8 W	
	P (cold) 20°C	9 W	9 W	
	AC Pn (holding)	8 W	8 W	
		32 VA (9 W)	32 VA (9 W)	
Voltage tolerance		Tolerance -10/ +10% of the nominal voltage		
Solenoid duty		Continuous duty solenoid (ED 100%)		

Available Voltages	Order Code	Order Code
6VDC	**483371 C0**	-
12VDC	**483371 C1**	-
24VDC	**483371 C2**	**494040 C2**
36VDC	**483371 C3**	-
48VDC	**483371 C4**	-
60VDC	**483371 M3**	-
110VDC	**483371 C5**	-
125VDC	**483371 3N**	**494040 3N**
220VDC	**483371 C7**	**494040 C7**
12/50VAC	**483371 A1**	-
24/50VAC	**483371 A2**	**494040 A2**
48/50VAC	**483371 A4**	-
110-115/50VAC	**483371 0A**	**494040 0A**
220-230/50	**483371 3D**	**494040 3D**
24/60VAC	**483371 B2**	-
110-115/60VAC	**483371 6J**	-
220-240/60VAC	**483371 4K**	-
380/50-440/60VAC	-	**494040 5P**

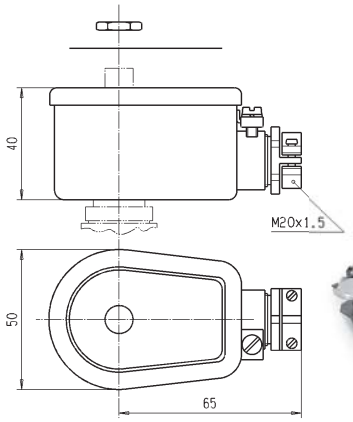



Fuses: Both electrical **483371…** and **494040…** parts have to be connected in series with a safety fuse according to CEI 60127-3.

483371…

DC: 24V / 400mA - 48V / 250mA
110V / 100mA

AC: 24V / 630mA - 48V / 315mA
110/115V / 160mA
220/230V / 80mA

494040…

DC: 24V / 400mA - 125V / 80mA
48V /220V - 63mA

AC: 24V / 630mA - 48V / 315mA
110/115V / 160mA
220/230V / 80mA

How to Order

The housing kit is already included into the coil reference, so it's not needed to add it in the order code:

Valve Reference Number - Coil Reference - Voltage code = Order code

Example: 347N33 - 483371C2

Valves and coils may be ordered also separately.

Spare Parts Mounting Kit and Accessories

Kit for G1/4" Models without conversion plate (N x 3 Series)



Kit includes the 2 mounting screws M5 x 25 A2, the dowel pin M5 x 10 A2, the 2 O-rings NBR 15 x 2.5
Order code: 496132

Kit for G1/4" Models with conversion plate (N x 5 Series)

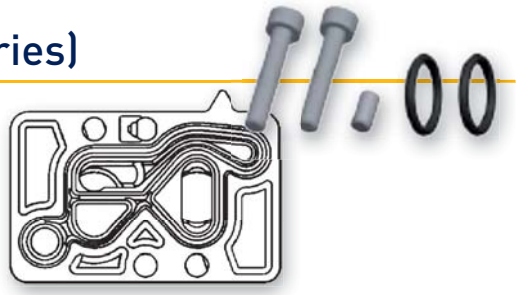

Kit includes the 2 mounting screws M5 x 35 A2, the dowel pin M5 x 20 A2, the conversion plate equipped with its seals
Order code: 496742

Kit for G1/2" Models (N x 4 Series)



Kit includes the 2 mounting screws M6 x 35 A2, the dowel pin M6 x 12 A2, the 2 O-rings NBR 24 x 3
Order code: 496133

Exhaust Flow Regulators



Material Body: Brass
Spring: Stainless Steel
Filter element: Sintered bronze
Seal: NBR

G1/8" **Order code: 496551**
G1/4" **Order code: 496552**
G1/2" **Order code: 496553**

Connector for 22 mm Coil



Connector DIN43650 AB Pg9 2P+E
Order code: 481043

Housing for 22 mm Coil



Plastic nut with O-ring
Order code: 3125

Connector for 32 mm Coil



Connector DIN43650 AA Pg9 2P+E
Order code: 486586

Notes

WARNING - USER RESPONSIBILITY

FAILURE OR IMPROPER SELECTION OR IMPROPER USE OF THE PRODUCTS DESCRIBED HEREIN OR RELATED ITEMS CAN CAUSE DEATH, PERSONAL INJURY AND PROPERTY DAMAGE.

- This document and other information from Parker-Hannifin Corporation, its subsidiaries and authorized distributors provide product or system options for further investigation by users having technical expertise.
- The user, through its own analysis and testing, is solely responsible for making the final selection of the system and components and assuring that all performance, endurance, maintenance, safety and warning requirements of the application are met. The user must analyze all aspects of the application, follow applicable industry standards, and follow the information concerning the product in the current product catalog and in any other materials provided from Parker or its subsidiaries or authorized distributors.
- To the extent that Parker or its subsidiaries or authorized distributors provide component or system options based upon data or specifications provided by the user, the user is responsible for determining that such data and specifications are suitable and sufficient for all applications and reasonably foreseeable uses of the components or systems.

Parker's Motion & Control Technologies

At Parker, we're guided by a relentless drive to help our customers become more productive and achieve higher levels of profitability by engineering the best systems for their requirements. It means looking at customer applications from many angles to find new ways to create value. Whatever the motion and control technology need, Parker has the experience, breadth of product and global reach to consistently deliver. No company knows more about motion and control technology than Parker. For further info call 00800 27 27 5374.



AEROSPACE

Key Markets
- Aircraft engines
- Business & general aviation
- Commercial transports
- Land-based weapons systems
- Military aircraft
- Missiles & launch vehicles
- Regional transports
- Unmanned aerial vehicles

Key Products
- Flight control systems & components
- Fluid conveyance systems
- Fluid metering delivery & atomization devices
- Fuel systems & components
- Hydraulic systems & components
- Inert nitrogen generating systems
- Pneumatic systems & components
- Wheels & brakes



CLIMATE CONTROL

Key Markets
- Agriculture
- Air conditioning
- Food, beverage & dairy
- Life sciences & medical
- Precision cooling
- Processing
- Transportation

Key Products
- CO^2 controls
- Electronic controllers
- Filter driers
- Hand shut-off valves
- Hose & fittings
- Pressure regulating valves
- Refrigerant distributors
- Safety relief valves
- Solenoid valves
- Thermostatic expansion valves



ELECTROMECHANICAL

Key Markets
- Aerospace
- Factory automation
- Food & beverage
- Life science & medical
- Machine tools
- Packaging machinery
- Paper machinery
- Plastics machinery & converting
- Primary metals
- Semiconductor & electronics
- Textile
- Wire & cable

Key Products
- AC/DC drives & systems
- Electric actuators
- Controllers
- Gantry robots
- Gearheads
- Human machine interfaces
- Industrial PCs
- Inverters
- Linear motors, slides and stages
- Precision stages
- Stepper motors
- Servo motors, drives & controls
- Structural extrusions



FILTRATION

Key Markets
- Food & beverage
- Industrial machinery
- Life sciences
- Marine
- Mobile equipment
- Oil & gas
- Power generation
- Process
- Transportation

Key Products
- Analytical gas generators
- Compressed air & gas filters
- Condition monitoring
- Engine air, fuel & oil filtration & systems
- Hydraulic, lubrication & coolant filters
- Process, chemical, water & microfiltration filters
- Nitrogen, hydrogen & zero air generators



FLUID & GAS HANDLING

Key Markets
- Aerospace
- Agriculture
- Bulk chemical handling
- Construction machinery
- Food & beverage
- Fuel & gas delivery
- Industrial machinery
- Mobile
- Oil & gas
- Transportation
- Welding

Key Products
- Brass fittings & valves
- Diagnostic equipment
- Fluid conveyance systems
- Industrial hose
- PTFE & PFA hose, tubing & plastic fittings
- Rubber & thermoplastic hose & couplings
- Tube fittings & adapters
- Quick disconnects



HYDRAULICS

Key Markets
- Aerospace
- Aerial lift
- Agriculture
- Construction machinery
- Forestry
- Industrial machinery
- Mining
- Oil & gas
- Power generation & energy
- Truck hydraulics

Key Products
- Diagnostic equipment
- Hydraulic cylinders & accumulators
- Hydraulic motors & pumps
- Hydraulic systems
- Hydraulic valves & controls
- Power take-offs
- Rubber & thermoplastic hose & couplings
- Tube fittings & adapters
- Quick disconnects



PNEUMATICS

Key Markets
- Aerospace
- Conveyor & material handling
- Factory automation
- Food & beverage
- Life science & medical
- Machine tools
- Packaging machinery
- Transportation & automotive

Key Products
- Air preparation
- Compact cylinders
- Field bus valve systems
- Grippers
- Guided cylinders
- Manifolds
- Miniature fluidics
- Pneumatic accessories
- Pneumatic actuators & grippers
- Pneumatic valves and controls
- Rodless cylinders
- Rotary actuators
- Tie rod cylinders
- Vacuum generators, cups & sensors



PROCESS CONTROL

Key Markets
- Chemical & refining
- Food, beverage & dairy
- Medical & dental
- Microelectronics
- Oil & gas
- Power generation

Key Products
- Analytical sample conditioning products & systems
- Fluoropolymer chemical delivery fittings, valves & pumps
- High purity gas delivery fittings, valves & regulators
- Instrumentation fittings, valves & regulators
- Medium pressure fittings & valves
- Process control manifolds



SEALING & SHIELDING

Key Markets
- Aerospace
- Chemical processing
- Consumer
- Energy, oil & gas
- Fluid power
- General industrial
- Information technology
- Life sciences
- Military
- Semiconductor
- Telecommunications
- Transportation

Key Products
- Dynamic seals
- Elastomeric o-rings
- EMI shielding
- Extruded & precision-cut, fabricated elastomeric seals
- Homogeneous & inserted elastomeric shapes
- High temperature metal seals
- Metal & plastic retained composite seals
- Thermal management

Parker

ENGINEERING YOUR SUCCESS.

Parker Worldwide

AE – UAE, Dubai
Tel: +971 4 8127100
parker.me@parker.com

AR – Argentina, Buenos Aires
Tel: +54 3327 44 4129

AT – Austria, Wiener Neustadt
Tel: +43 (0)2622 23501-0
parker.austria@parker.com

AT – Eastern Europe,
Wiener Neustadt
Tel: +43 (0)2622 23501 900
parker.easteurope@parker.com

AU – Australia, Castle Hill
Tel: +61 (0)2-9634 7777

AZ – Azerbaijan, Baku
Tel: +994 50 2233 458
parker.azerbaijan@parker.com

BE/LU – Belgium, Nivelles
Tel: +32 (0)67 280 900
parker.belgium@parker.com

BR – Brazil, Cachoeirinha RS
Tel: +55 51 3470 9144

BY – Belarus, Minsk
Tel: +375 17 209 9399
parker.belarus@parker.com

CA – Canada, Milton, Ontario
Tel: +1 905 693 3000

CH – Switzerland, Etoy
Tel: +41 (0)21 821 87 00
parker.switzerland@parker.com

CL – Chile, Santiago
Tel: +56 2 623 1216

CN – China, Shanghai
Tel: +86 21 2899 5000

CZ – Czech Republic, Klecany
Tel: +420 284 083 111
parker.czechrepublic@parker.com

DE – Germany, Kaarst
Tel: +49 (0)2131 4016 0
parker.germany@parker.com

DK – Denmark, Ballerup
Tel: +45 43 56 04 00
parker.denmark@parker.com

ES – Spain, Madrid
Tel: +34 902 330 001
parker.spain@parker.com

FI – Finland, Vantaa
Tel: +358 (0)20 753 2500
parker.finland@parker.com

FR – France, Contamine s/Arve
Tel: +33 (0)4 50 25 80 25
parker.france@parker.com

GR – Greece, Athens
Tel: +30 210 933 6450
parker.greece@parker.com

HK – Hong Kong
Tel: +852 2428 8008

HU – Hungary, Budapest
Tel: +36 1 220 4155
parker.hungary@parker.com

IE – Ireland, Dublin
Tel: +353 (0)1 466 6370
parker.ireland@parker.com

IN – India, Mumbai
Tel: +91 22 6513 7081-85

IT – Italy, Corsico (MI)
Tel: +39 02 45 19 21
parker.italy@parker.com

JP – Japan, Tokyo
Tel: +81 (0)3 6408 3901

KR – South Korea, Seoul
Tel: +82 2 559 0400

KZ – Kazakhstan, Almaty
Tel: +7 7272 505 800
parker.easteurope@parker.com

LV – Latvia, Riga
Tel: +371 6 745 2601
parker.latvia@parker.com

MX – Mexico, Apodaca
Tel: +52 81 8156 6000

MY – Malaysia, Shah Alam
Tel: +60 3 7849 0800

NL – The Netherlands,
Oldenzaal
Tel: +31 (0)541 585 000
parker.nl@parker.com

NO – Norway, Ski
Tel: +47 64 91 10 00
parker.norway@parker.com

NZ – New Zealand, Mt Wellington
Tel: +64 9 574 1744

PL – Poland, Warsaw
Tel: +48 (0)22 573 24 00
parker.poland@parker.com

PT – Portugal, Leca da Palmeira
Tel: +351 22 999 7360
parker.portugal@parker.com

RO – Romania, Bucharest
Tel: +40 21 252 1382
parker.romania@parker.com

RU – Russia, Moscow
Tel: +7 495 645-2156
parker.russia@parker.com

SE – Sweden, Spånga
Tel: +46 (0)8 59 79 50 00
parker.sweden@parker.com

SG – Singapore
Tel: +65 6887 6300

SK – Slovakia, Banská Bystrica
Tel: +421 484 162 252
parker.slovakia@parker.com

SL – Slovenia, Novo Mesto
Tel: +386 7 337 6650
parker.slovenia@parker.com

TH – Thailand, Bangkok
Tel: +662 717 8140

TR – Turkey, Istanbul
Tel: +90 216 4997081
parker.turkey@parker.com

TW – Taiwan, Taipei
Tel: +886 2 2298 8987

UA – Ukraine, Kiev
Tel +380 44 494 2731
parker.ukraine@parker.com

UK – United Kingdom,
Warwick
Tel: +44 (0)1926 317 878
parker.uk@parker.com

US – USA, Cleveland
Tel: +1 216 896 3000

VE – Venezuela, Caracas
Tel: +58 212 238 5422

ZA – South Africa,
Kempton Park
Tel: +27 (0)11 961 0700
parker.southafrica@parker.com

Ed. 2010-06-08

European Product Information Centre
Free phone: 00 800 27 27 5374
(from AT, BE, CH, CZ, DE, EE, ES, FI, FR, IE, IL, IS, IT, LU, MT, NL, NO, PT, SE, SK, UK)

© 2010 Parker Hannifin Corporation.
All rights reserved.

Catalogue 1101/UK - 06/2010 - TMCZ



Subject to Change