- **Port size: 1 1/2” & 2” (ISO G, PTF)**
- **Can be installed at any point in the compressed air system without regard to accessibility – pilot regulator can be installed in the most convenient location**
- **Accurate pressure regulation over a wide range of flows**
- **Can be used with conventional pilot regulator**





## Technical features

**Medium:**
Compressed air only
**Operation pressure:**
31 bar (450 psi) maximum
**Pressure range:**
Standard
0,16 ... 17 bar (2.3 ... 246 psi)
With pilot regulator
0,3 ... 8,5 bar (4.3 ... 123 psi)

**Typical flow:**
see below
**Main port size:**
1 1/2” & 2”
**Relieving port:**
3/4 PTF with PTF main ports
G1/4 with ISO G main ports
**Gauge port:**
1/4 PTF with PTF main ports
Rc1/4 with ISO G main ports

**Relieving:**
Standard
**Ambient/Media temperature:**
-34° ... 80°C (-30° ... +175 °F)
Version with gauge:
-34° ... +65°C (-30° ... +149°F)
Air supply must be dry enough to avoid ice formation at temperatures below +2°C (+35 °F).

**Materials:**
Body & bonnet: Aluminum alloy
Bottom plug: Acetal
Valve: Aluminum and PA
Elastomers: NBR

## Technical data, standard models

| Symbol | Port size | Flow *1) (dm³/s) | Regulator | Outlet pressure range (bar) | Weight (kg) | Model |
|---|---|---|---|---|---|---|
|  | G1 1/2 | 944 | — | 0,16 ... 17 | 3,09 | R18-B00-RNXG |
| | G2 | 944 | — | 0,16 ... 17 | 2,99 | R18-C00-RNXG |
| 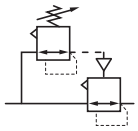 | G 1 1/2 | 944 | R40 included | 0,3 ... 8,5 | 3,85 | R18-B05-RNLG |
| | G 2 | 944 | R40 included | 0,3 ... 8,5 | 3,75 | R18-C05-RNLG |
| 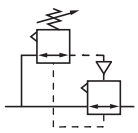 | G 1 1/2 | 944 | R41 included | 0,3 ... 8,5 | 3,85 | R18-B06-RNSG |
| | G 2 | 944 | R41 included | 0,3 ... 8,5 | 3,75 | R18-C06-RNSG |

*1) Typical flow with 0,7 bar inlet pressure, 6,3 bar set pressure and a 1 bar droop from set.

## Option selector

**R18-★0★-★N★★**

| Port size | Substitute |
|---|---|
| 1 1/2” | B |
| 2” | C |
| **Pilot regulator** | **Substitute** |
| Without (standard) | 0 |
| With R40 conventional | 5 |
| With R41 feedback *1) | 6 |

*1) Requires relieving diaphragm and 17 bar (250 psig) spring (R in 7th position and S in 9th position) e.g. R18-B06-RNSG.
The 06 option cannot be used at an outlet pressure below 6,9 bar (100 psig). For feedback control at pressures below 6,9 bar (100 psig) use an 11-104-001 with a pilot operated R18.

| Thread form | Substitute |
|---|---|
| PTF | A |
| ISO G | G |
| **Outlet pressure rage *2)** | **Substitute** |
| Without (standard) | X |
| 0,1 ... 3,5 bar (with R40) | E |
| 0,3 ... 8,5 bar (with R40) | L |
| 0,7 ... 17 bar (with R40 & R41) | S |
| **Diaphragm** | **Substitute** |
| Relieving | R |
| Non relieving | N |

*2) Outlet pressures can be adjusted to pressures in excess of, and less than, those specified. Do not use these units to control pressures outside of the specified ranges.



Our policy is one of continued research and development. We therefore reserve the right to amend, without notice, the specifications given in this document. (1997 - 8134e) © 2014 Norgren Inc.

## Flow characteristics

**Port size: 2”,**
**Inlet pressure: 6,9 bar, pilot spring range 0,3 ... 8,5 bar**

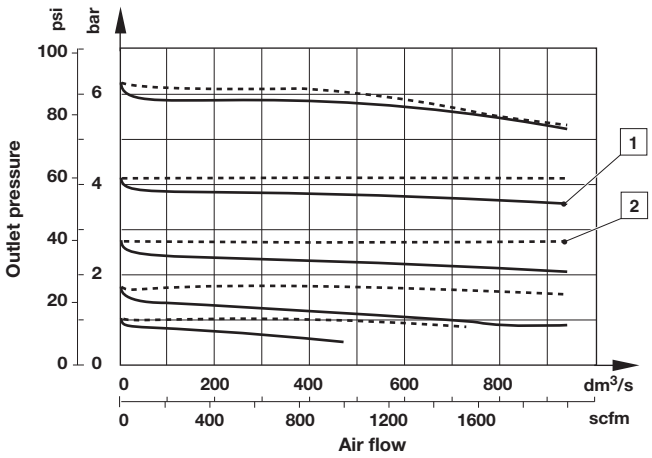


## Relief characteristics

**Port size: 2”,**
**Inlet pressure: 10 bar**

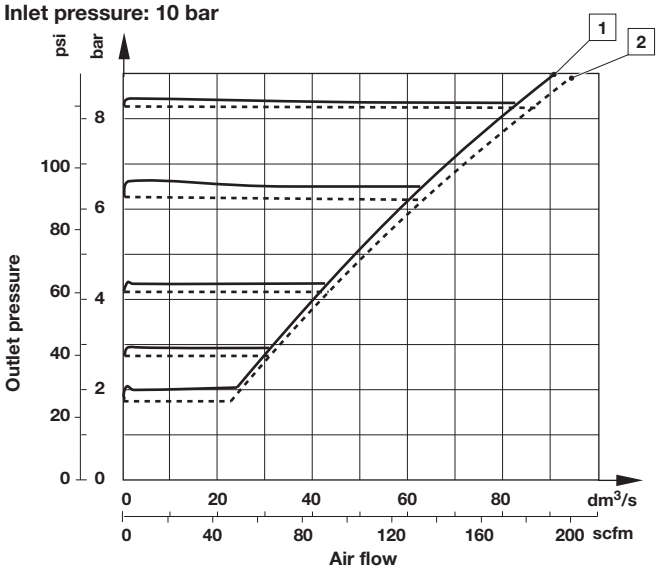


1 R18 with R40 conventional pilot
2 R18 with R41 feedback pilot

## Accessories

**Silencer**



**Concentric reducing adaptors for gauge ports**



**Page 4**

| | |
|---|---|
| R3/4: MB006B | R1/4-G1/8 150232818 |
| 3/4 NPT: MB006A | |

## Service kits

**Service kit**



| |
|---|
| R18-100R (R18) |
| R18-100R & 5945-41 (R18 & R40) |

## Gauge

**Center back connection, white face (for full technical specification see datasheet 8.900.900)**



**Pressure range**

| bar *1 | Mpa | psi | Ø | Thread size | Model |
|---|---|---|---|---|---|
| 0 ... 1,6 | 0 ... 0,16 | 0 ... 23 | 50 mm | R1/8 | 18-013-010 |
| 0 ... 4 | 0 ... 0,4 | 0 ... 58 | 50 mm | R1/8 | 18-013-011 |
| 0 ... 6 | 0 ... 0,6 | 0 ... 87 | 50 mm | R1/8 | 18-013-012 |
| 0 ... 10 | 0 ... 1 | 0 ... 145 | 50 mm | R1/8 | 18-013-013 |
| 0 ... 25 | 0 ... 2,5 | 0 ... 362 | 50 mm | R1/8 | 18-013-014 |

*1) primary scale

**Center back connection, black face for North America (for full technical specification see datasheet 8.900.900)**



**Pressure range**

| psig *1 | bar | Mpa | Ø | Thread size | Model |
|---|---|---|---|---|---|
| 0 ... 30 | 0 ... 2 | 0 ... 0.2 | 2” (50 mm) | 1/4 NPT | 18-013-207 |
| 0 ... 60 | 0 ... 4 | 0 ... 0.4 | 2” (50 mm) | 1/4 NPT | 18-013-208 |
| 0 ... 160 | 0 ... 11 | 0 ... 1.1 | 2” (50 mm) | 1/4 NPT | 18-013-209 |
| 0 ... 300 | 0 ... 20 | 0 ... 2.1 | 2” (50 mm) | 1/4 NPT | 18-013-210 |

*1) primary scale


Our policy is one of continued research and development. We therefore reserve the right to amend, without notice, the specifications given in this document. (1997 - 8134e) © 2014 Norgren Inc.

## Dimensions

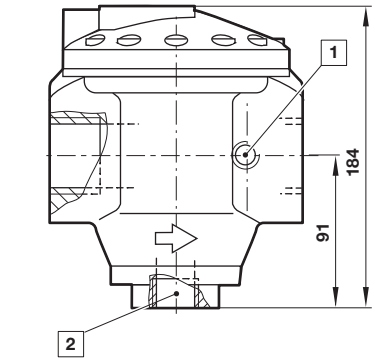


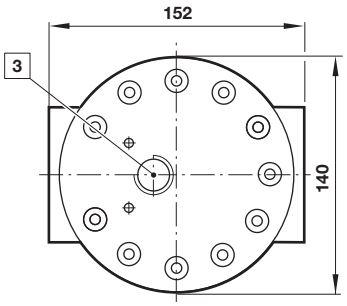


## Silencer

Dimensions in mm
Projection/First angle

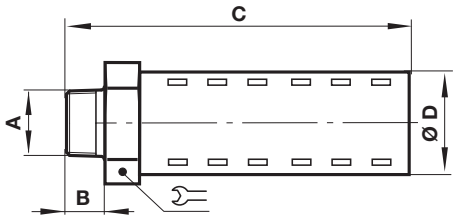


| A | B | C | D | | Model |
|---|---|---|---|---|---|
| R3/4 | 20 | 134 | 51 | 51 | MB006B |
| 3/4 NPT | 20 | 134 | 51 | 51 | MB006A |

## With pilot regulator R40

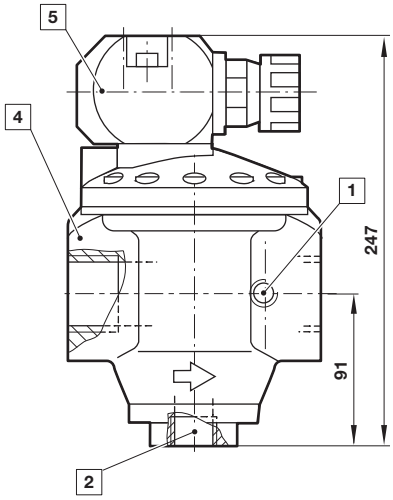


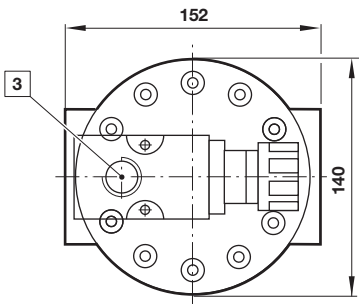


## With feedback pilot regulator R41

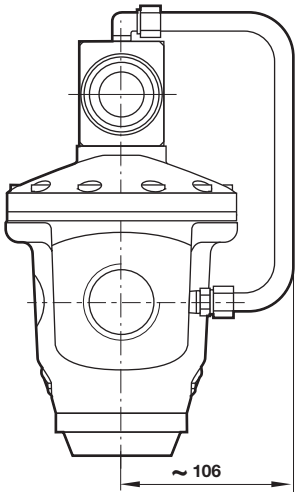


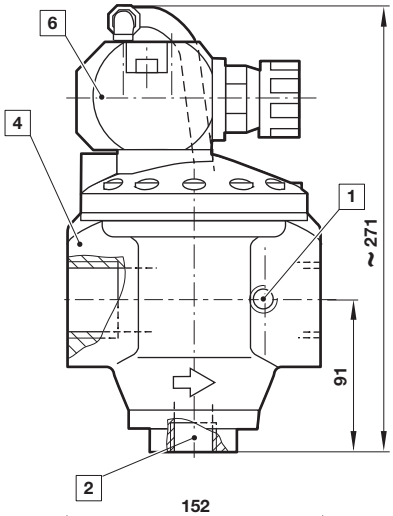


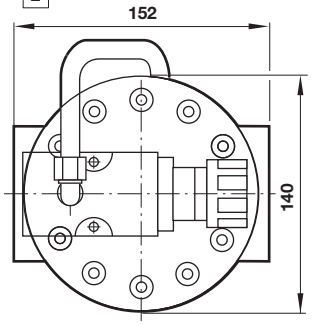


1 1/4" gauge port
2 3/4" relieving port
3 1/4" pilot port
4 Regulator R18
5 Regulator R40
6 Regulator R41

## Warning

These products are intended for use in industrial compressed air systems only. Do not use these products where pressures and temperatures can exceed those listed under **»Technical features/data«**.
Before using these products with fluids other than those specified, for non-industrial applications, life-support systems or other applications not within published specifications, consult IMI Precision Engineering, Norgren Inc.
Through misuse, age, or malfunction, components used in fluid power systems can fail in various modes.

The system designer is warned to consider the failure modes of all component parts used in fluid power systems and to provide adequate safeguards to prevent personal injury or damage to equipment in the event of such failure.
System designers must provide a warning to end users in the system instructional manual if protection against a failure mode cannot be adequately provided.
System designers and end users are cautioned to review specific warnings found in instruction sheets packed and shipped with these products.


Our policy is one of continued research and development. We therefore reserve the right to amend, without notice, the specifications given in this document. (1997 - 8134e) © 2014 Norgren Inc.