bürkert
FLUID CONTROL SYSTEMS



2/2 or 3/2-way Solenoid Valve for aggressive media, G 1/4

- Pivoted armature valve with manual override
- Direct-acting with separating diaphragm
- Different circuit function available
- Suitable for aggressive media
- Plastic body in PP or PVDF

Type 0124 can be combined with...

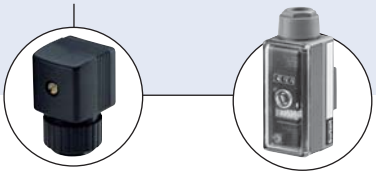

Type 2508
Cable plug

Type 1078
Timer unit

The Type 0124 is a direct-acting 2/2 or 3/2-way pivoted armature solenoid valve. Deliverable in many circuit functions for opening, closing, dosing, mixing and distribution. The magnetic system and the media chamber are separated from one another by a separating diaphragm system.

Circuit function A

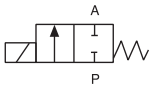

2/2-way valve NC

Circuit function C



3/2-way valve NC

Circuit function E

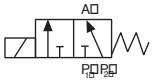

3/2-way mixer valve

Circuit function F

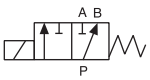

3/2-way distribution valve

Technical data	
Orifice	DN 3.0 - 5.0 mm
Body and seat material	PP, PVDF
Coil material	Epoxy
Coil insulation class	H
Seal material	EPDM, FKM NBR and FFKM on request
Media EPDM FKM	 Alkalis, acids up to medium concentrations, alkaline washing and bleaching lyes, Oxidising acids and substances, oils, salt solutions, waste gases
Media temperature EPDM FKM	 – 30 to +80 °C 0 to +80 °C
Ambient temperature	Max. +55 °C
Voltage tolerance	±10%
Duty cycle Intermittent operation Continuous operation	 40% ED (30 min) with 8 W version 100% ED with 5 W version (on request)
Electrical connection	Tag connector acc. to DIN EN 175301-803 Form A (previously DIN 43650) for cable plug Type 2508 (supplied as standard)
Protection class	IP 65 with cable plug
Installation	As required, preferably with actuator upright

DTS 1000010905 EN Version: D Status: RL (released | freigegeben | validé) printed: 19.04.2013

Technical data

Inrush	Hold	warm/cold	Weight
AC [VA]	AC [VA/W]	DC [W]	kg
30	15/8	8/11	0.4

Orifice	Response times			
	AC		DC	
[mm]	Opening [ms]	Closing [ms]	Opening [ms]	Closing [ms]
2-4	8-15	8-15	10-20	10-20

The springs of each valve are set up for a specific circuit function. When using them in other circuit functions, the permissible operating pressure changes according to the following table.

Response times [ms]:
Measured at valve outlet at 6 bar and +20 °C
Opening: pressure build-up 0 to 90%, ***closing***: pressure relief 100 to 10%

Circuit function	Max. operating pressure [bar] when using the valve in a new circuit function											
	Orifice 3.0						Orifice 4.0					
	A	B	C	D	E	F	A	B	C	D	E	F
C	10	1	10	1	1	10	5	0.8	5	0.8	0.8	5
D	6	6	6	6	6	3	3	3	3	3	3	3
F	5	1	6	1	1	10	4	1	4	1	1	4

Materials

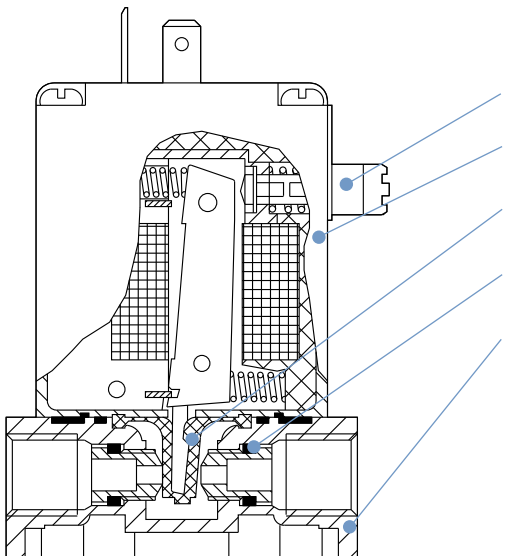

DTS 1000010905 EN Version: D Status: RL (released | freigegeben | validé) printed: 19.04.2013

Ordering chart for valves (other versions on request)

Circuit function	Port connection	Orifice [mm]	Kv value water [m³/h]	Pressure range [bar]	Voltage/ frequency [V/Hz]	Item no. Seal material FKM	Item no. Seal material EPDM
All valves body material PP, manual override and cable plug, different seal materials							
A	G 1/4	3.0	0.25	0 - 8	024/DC	018 410	067 214
				0 - 10	24/50	088 496	022 105
					230/50	045 653	062 398
	G 1/4	4.0	0.30	0 - 4	024/DC	062 695	021 660
				0 - 5	024/50	043 005	067 731
					110/50	087 029	–
					230/50	063 116	063 118
	G 1/4	5.0	0.40	0 - 3	024/DC	062 624	061 321
				0 - 4.5	024/50	067 007	054 261
					110/50	–	088 468
					230/50	022 619	049 969
C	G 1/4	4.0	0.30	0 - 5	024/50	088 420	–
					230/50	–	063 625
E	G 1/4	3.0	0.25	0 - 4	024/DC	069 917	078 556
				0 - 6	024/50	066 230	–
					230/50	022 294	078 559
	G 1/4	4.0	0.30	0 - 2	024/DC	061 077	067 160
				0 - 3	024/50	086 921	044 693
					230/50	053 406	066 033
F	G 1/4	4.0	0.30	0 - 4	024/DC	020 528	–
				0 - 5	230/50	–	066 032
All valves with body material PVDF, manual override and cable plug, seal material FKM							
A	G 1/4	3.0	0.25	0 - 8	024/DC	018 188	–
				0 - 10	024/50	020 286	–
					110/50	078 784	–
					230/50	069 006	–
	G 1/4	4.0	0.30	0 - 4	024/DC	023 472	–
				0 - 5	024/50	069 079	–
					230/50	087 837	–
	G 1/4	5.0	0.40	0 - 3	024/DC	064 512	–
				0 - 4.5	230/50	063 786	–
C	G 1/4	4.0	0.30	0 - 4	024/DC	055 788	–
				0 - 5	230/50	019 078	–
E	G 1/4	4.0	0.30	0 - 2	024/DC	022 340	–
				0 - 3	024/50	020 550	–
					230/50	085 599	–

A 2/2-way valve NC

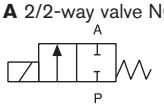

C 3/2-way valve NC

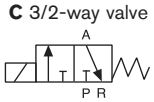

E 3/2-way mixer valve

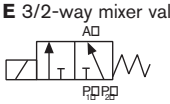

F 3/2-way distribution valve

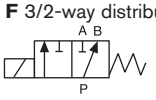

Further versions on request

Approvals
UR, CSA, ATEX

Voltage
Non-standard voltages

Pressure
Vacuum version

Port Connection
NPT 1/4, sub-base

Materials
Seal material - FFKM

Additional
Optical or electrical feedback

DTS 1000010905 EN Version: D Status: RL (released | freigegeben | validé) printed: 19.04.2013

Dimensions [mm]

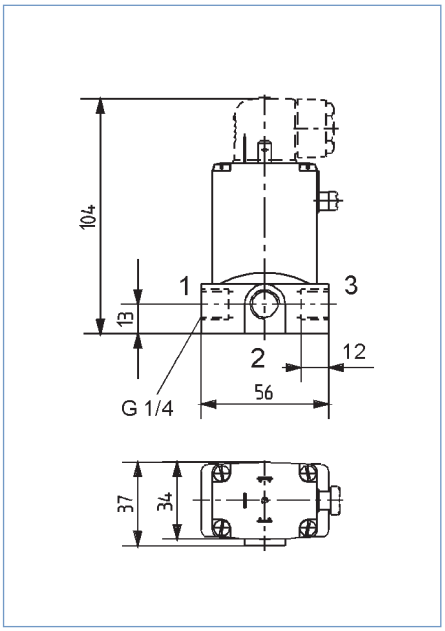

The ports are marked with 1, 2 and 3 as indicated in the configuration table, depending on the circuit function.

Possible port configurations

Circuit function	1	2	3
A[1)]	A	-	P
C	P	A	R
E	P1	A	P2
F	A	P	B

[1)] Type 0124 has no middle connection in circuit function A.

DTS 1000010905 EN Version: D Status: RL (released | freigegeben | validé) printed: 19.04.2013

Subject to Change