TruControl MS™ Valve 83154 2/2-way media-separated valve



- Media-separated design
- Size: DN 2,5 and 3,0
- Direct acting
- High flow rate
- Functional compact design
- No lime scale build up
- Low-maintenance & durable
- Single or interlinkable
- Interlinkable without tools
- Certified according to NSF 169

Technical features

Design:
83154 series valves are available as inlet or outlet valves.

Inlet valve:
For use as interlinked manifold, always in combination with an outlet valve.

Outlet valve:
For use as a single valve without interlinking, or for use as an end-of-line valve in a manifold.

Medium:
Neutral gases and liquids

Switching function:
Normally closed

Version:
Directly solenoid actuated

Mounting position:
Preferably solenoid vertical on top, coil on single valve 4 x 90° rotatable, on manifolds enc coils 3x90°, middle coils 2x180° rotatable

Flow direction:
Determined

Port size:
- Standard ø 6 mm PIF
- Optional ø 4 mm PIF
OD tube tolerance ± 0,1 mm

Operating pressure:
–0,6 ... 15 bar (–8,7 ... 217,5 psi)

Ambient temperature:
+1 ... +60°C (+33,8 ... +140°F)

Fluid temperature:
+1 ... +130°C (+33,8 ... +266°F)

Material:
Body: PPS
Seat seal: FKM
Internal parts: Stainless steel

This valve is tested and certified as a component by NSF International against NSF/ANSI Standard 169.

Our policy is one of continued research and development. We therefore reserve the right to amend, without notice, the specifications given in this document. (2015 - 5931j) © 2024 Buschjost GmbH

Technical data – Inlet Valve

Symbol	Port size	Orifice	Flow kv value *1)	Flow kv value	Operating pressure *2)	Weight	Model
		(mm)	(m^3/h)	(l/min)	(bar)	(kg)	Solenoid in V d.c
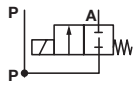	4 PIF *3)	2,5	0,12	2,0	10/15 *4)	0,1	8315400.9827.02400
	4 PIF *3)	3,0	0,12	2,0	4/6 *4)	0,1	8315401.9827.02400
	6 PIF *3)	2,5	0,18	3,0	10/15 *4)	0,1	8315402.9827.02400
	6 PIF *3)	3,0	0,27	4,5	4/6 *4)	0,1	8315403.9827.02400
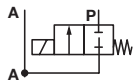	4 PIF *3)	2,5	0,12	2,0	4,0	0,1	8315400.9827.02400
	4 PIF *3)	3,0	0,12	2,0	2,0	0,1	8315401.9827.02400
	6 PIF *3)	2,5	0,18	3,0	4,0	0,1	8315402.9827.02400
	6 PIF *3)	3,0	0,27	4,5	2,0	0,1	8315403.9827.02400

*1) Cv-value (US) ≈ kv value x 1,2
*2) For gases and liquid fluids up to 25 mm^2/s (cSt)
*3) PIF = Push-in fitting
*4) Duty cycle 40%, cycle time 180 sec.

Technical data – Outlet Valve

Symbol	Port size	Orifice	Flow kv value *1)	Flow kv value	Operating pressure *2)	Weight	Model
		(mm)	(m^3/h)	(l/min)	(bar)	(kg)	Solenoid in V d.c.
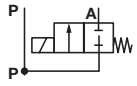	4 PIF *3)	2,5	0,12	2,0	10/15 *4)	0,1	8315410.9827.02400
	4 PIF *3)	3,0	0,12	2,0	4/6 *4)	0,1	8315411.9827.02400
	6 PIF *3)	2,5	0,18	3,0	10/15 *4)	0,1	8315412.9827.02400
	6 PIF *3)	3,0	0,27	4,5	4/6 *4)	0,1	8315413.9827.02400
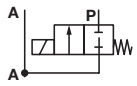	4 PIF *3)	2,5	0,12	2,0	4,0	0,1	8315410.9827.02400
	4 PIF *3)	3,0	0,12	2,0	2,0	0,1	8315411.9827.02400
	6 PIF *3)	2,5	0,18	3,0	4,0	0,1	8315412.9827.02400
	6 PIF *3)	3,0	0,27	4,5	2,0	0,1	8315413.9827.02400

*1) Cv-value (US) ≈ kv value x 1,2
*2) For gases and liquid fluids up to 25 mm^2/s (cSt)
*3) PIF = Push-in fitting
*4) Duty cycle 40%, cycle time 180 sec.

Technical data – Valve top

Symbol	Orifice	Flow kv value *1)	Flow kv value	Operating pressure *2)	Weight	Model
	(mm)	(m^3/h)	(l/min)	(bar)	(kg)	Solenoid in V d.c.
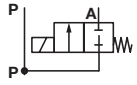	2,5	0,18	3,0	10/15 *4)	0,1	8315430.9827.02400
	3,0	0,27	4,5	4/6 *4)	0,1	8315431.9827.02400
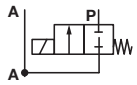	2,5	0,18	3,0	4,0	0,1	8315430.9827.02400
	3,0	0,27	4,5	2,0	0,1	8315431.9827.02400

*1) Cv-value (US) ≈ kv value x 1,2
*2) For gases and liquid fluids up to 25 mm^2/s (cSt)
*3) PIF = Push-in fitting
*4) Duty cycle 40%, cycle time 180 sec.

Our policy is one of continued research and development. We therefore reserve the right to amend, without notice, the specifications given in this document. (2015 - 5931j) © 2024 Buschjost GmbH

Option selector

83154★★.9827.02400

Connection	Substitute
Inlet valve	0
Outlet valve	1
Valve top	3

Orifice (mm)	Substitute
Seat seal FKM - NSF 169 listed PIF 4 mm DN 2,5 mm	0
Seat seal FKM - NSF 169 listed PIF 4 mm DN 3,0 mm	1
Seat seal FKM - NSF 169 listed PIF 6 mm DN 2,5 mm	2
Seat seal FKM - NSF 169 listed PIF 6 mm DN 3,0 mm	3

Options (Solenoids)	Substitute
Voltage range +5% up to 4/10 bar duty cycle 100% Terminals 6,3 x 0,8 Protection class IP00 w/o PE	9827

Design acc. to DIN VDE 0580
Further versions on request!

Standard solenoid systems

Voltage and Frequency Solenoid 9827

Code Voltage	Code Frequency	Voltage	Frequency	Power consumption	
				Inrush	Holding
024	00	24 V d.c.	-	11,5 W	11,5 W

Electrical details for all solenoid systems
According to DIN VDE 0580 at a solenoid temperature of +20°C.
At operating state temperature the input power of a coil decreases by up to ca. 30% due to physical reasons.

c UL us
Coil only

Our policy is one of continued research and development. We therefore reserve the right to amend, without notice, the specifications given in this document. (2015 - 5931j) © 2024 Buschjost GmbH

Dimensions

Inlet Valve

831540x.982x.xxxxx

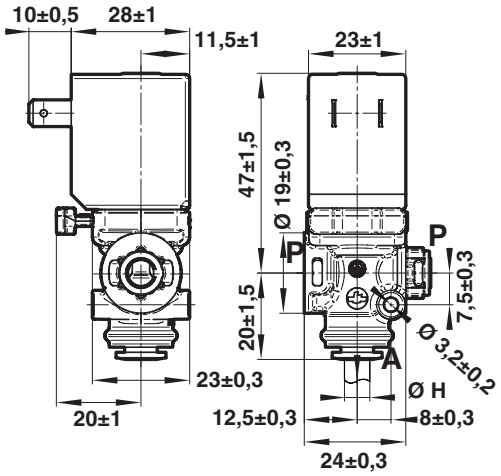

Outlet Valve

831541x.982x.xxxxx

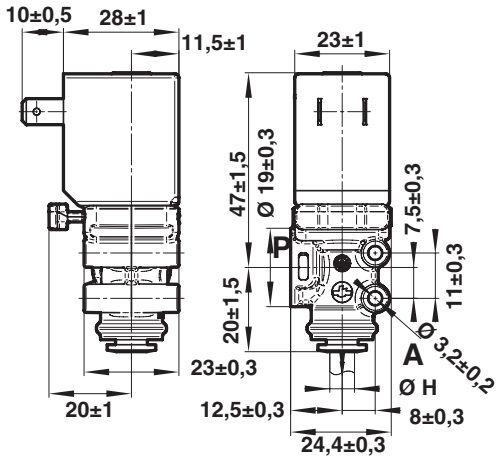

Inlet Fitting

No. 1710752 for hose outer diameter 4 mm
No. 1710753 for hose outer diameter 6 mm

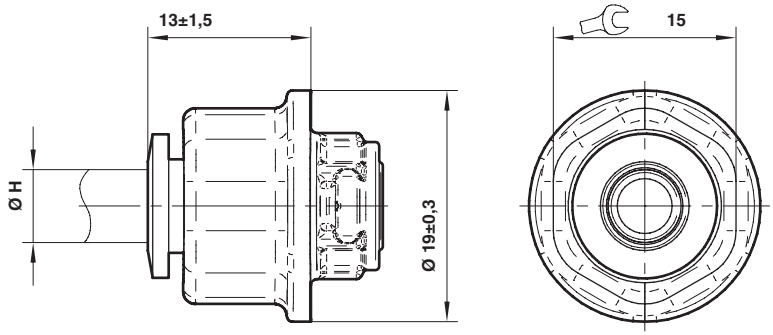

Installation Instruction:
- Max. 7 valves interlinked
- Please fix the interlinked manifold at the beginning and at the end with screw.

Notes on Directive 2014/30/EU (Electromagnetic Compatibility)

Valve solenoids are passive inductive components and thus are not subject to the directive 2014/30/EU.

In combination with other controlling electrical devices the electromagnetical compatibility of the complete installation must be checked according to the abovementioned directive. It has to be ensured that the requirements of the EN 61000-6-x series of standards are fulfilled for the application.

In order to avoid inductive switching voltage peaks, the solenoids are equipped with a varistor.

Our policy is one of continued research and development. We therefore reserve the right to amend, without notice, the specifications given in this document. (2015 - 5931j) © 2024 Buschjost GmbH

Notes



Depending on the design, 83154 series valves are available as inlet or outlet valves. They can either be installed individually or interlinked, with a maximum of 7 valves in a manifold, depending on the type of application and the available installation space.

You will need an inlet fitting (see above) for installation in your applications. **Please order the inlet fitting separately.**

If you have any questions, do not hesitate to call us on +49 (0) 5731/791-0 or write an email to buschjost@imi-precision.com.
We will be happy to help.

Single Valve



Interlinked Manifold



Please note the following when placing your order:

– **Do you need a single valve?**
In this case, please order an outlet valve.
The inlet fitting that you need for your application must be ordered separately.

You can find the corresponding item numbers on page 2 and 4 of this datasheet.

– **Do you want to link several valves together in a manifold?**
For an interlinked valve manifold, you need 1 outlet valve and a corresponding number of inlet valves.
For example, if you want to interlink 4 valves, then please order 1 outlet valve and 3 inlet valves.
In an interlinked manifold, up to 7 valves can be connected.

Important: In this case, you will need an inlet fitting for installation in your application.
Please order the inlet fitting separately.

You can find the corresponding item numbers on page 2 and 4 of this datasheet.

Our policy is one of continued research and development. We therefore reserve the right to amend, without notice, the specifications given in this document. (2015 - 5931j) © 2024 Buschjost GmbH

Subject to Change